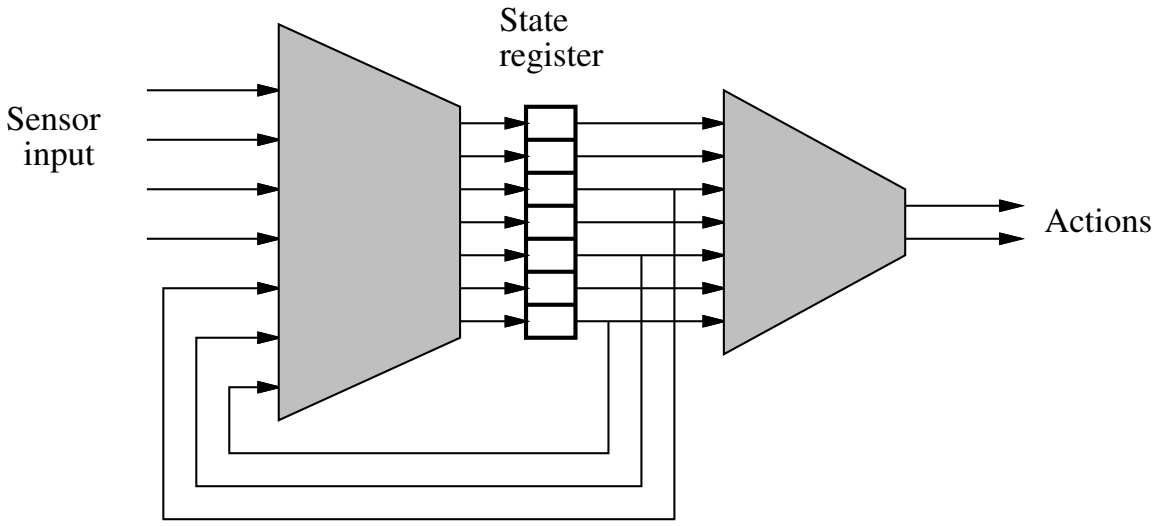
State
register
Sensor
input
Actions