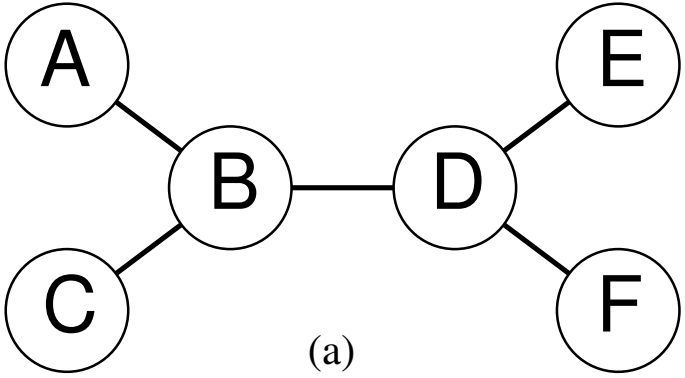

(a)

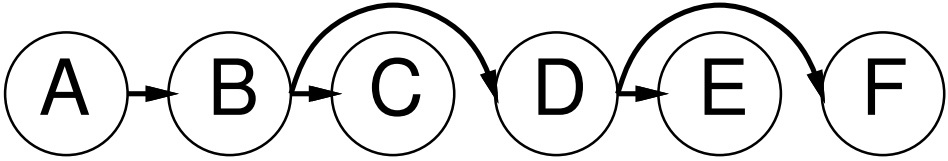

(b)